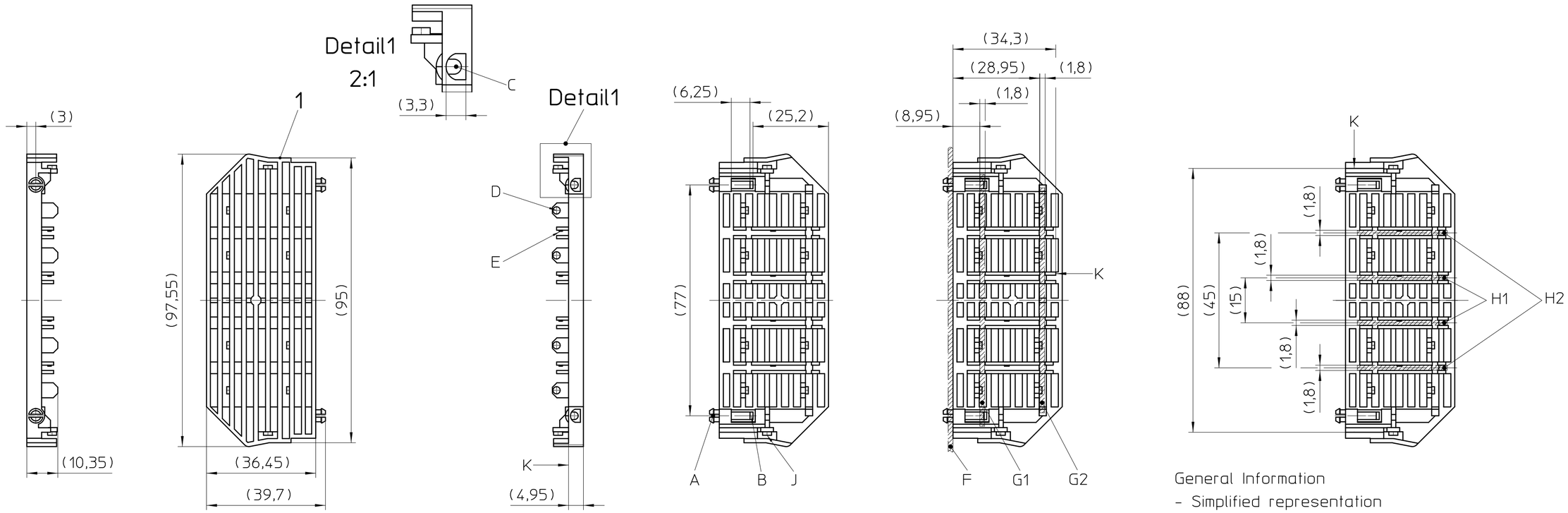

General Information
- Simplified representation
- Document excluded from change process
- Linear dimensions [mm]
- Tolerances, apply in a normal climate according to DIN EN ISO 291-23/50-2, PA plastic parts with about 2% (% by weight) moisture content.
- Web: www.phoenixcontact.com webcode: #0313 / #0314

Additional Information:
A. Fixing point for PCB LID-92
   Recommended PCB hole: ∅4±0,05
B. Locking element for A
C. Slot to actuate the locking element
   Recommended tool: pin ∅3
D. Fixing point for PCB LID 92 horizontal ...
E. Fixing point for PCB LID 92 vertical ...
F. PCB LID-92 (t=1,6±0,2)
G1. PCB LID-92 horizontal 1 (t=1,6±0,2)
G2. PCB LID-92 horizontal 2 (t=1,6±0,2)
H1. PCB LID-92 vertical 1 (t=1,6±0,2)
H2. PCB LID-92 vertical 2 (t=1,6±0,2)
I. UM-...A/U 92 (U-shaped profile cover)
J. Fixing point for UM-...A/U 92
K. Bearing surface for UM-... A/U 92

Recommended PCB-outline see further documentation

Assembly examples: Side element with Cover and PCBs

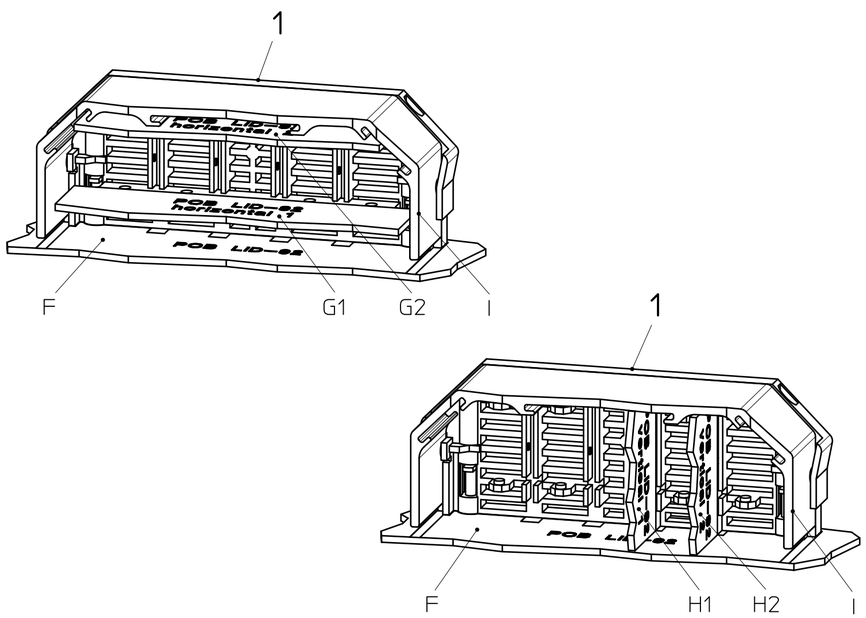

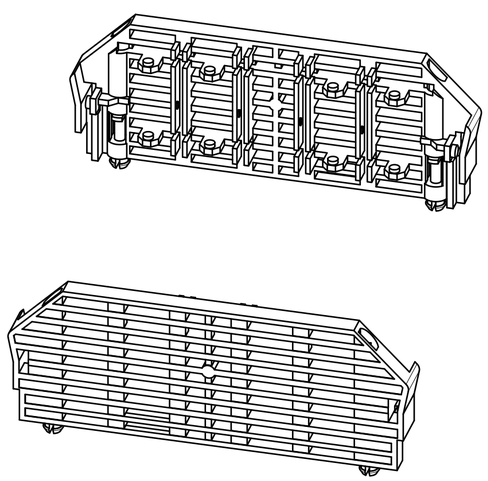

Pos.	QTY	description	material
1	1	SIDE ELEMENT	PA

DIN A2 | document-No. / RI: 01094258 /02 | date: 22.05.2025 | scale: 1:1

PHOENIX CONTACT | ident.-No.: 2202047 | document-type: TECDOC 2D_Productdrawing

page 1 of 1 | description: UM-BASIC/PRO LID-92 KMGY

Transfer or duplication of this document as well as the utilisation or communication of its content are not permitted unless express consent is granted. Violations give rise to claims for damages. All rights reserved in case of patent, utility model or design patent registrations.

Weitergabe sowie Vervielfältigung dieses Dokuments, Verwertung und Mitteilung seines Inhalts sind verboten, soweit nicht ausdrücklich gestattet. Zuwiderhandlungen verpflichten zu Schadenersatz. Alle Rechte für den Fall der Patent-, Gebrauchsmuster- oder Designeintragung vorbehalten.