HOUSING LEFT

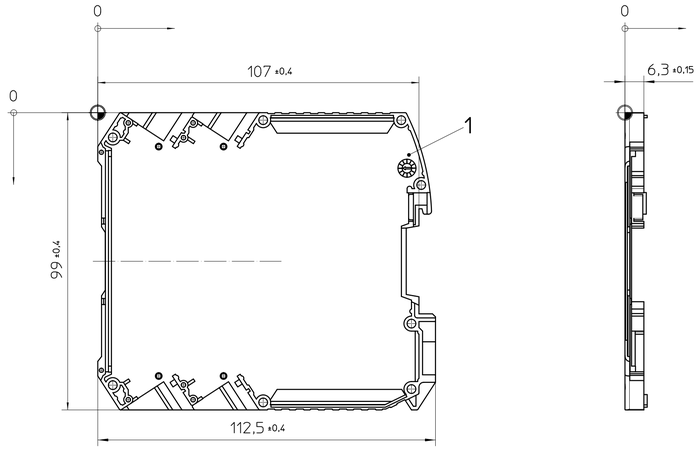

HOUSING RIGHT

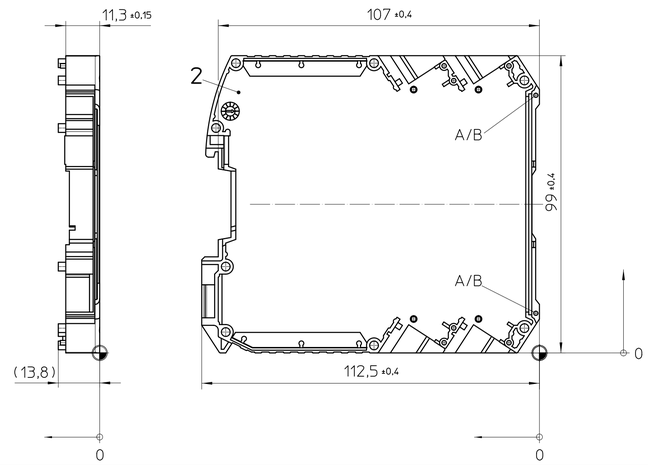

Assembly example: ME MAX 35 G 2-2

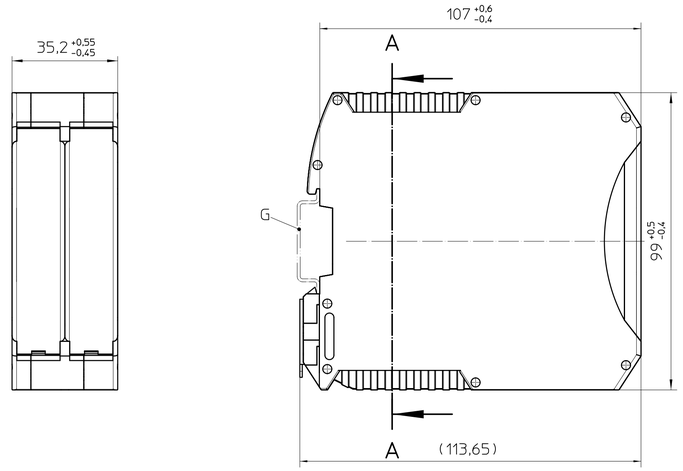

HOUSING MIDDLE

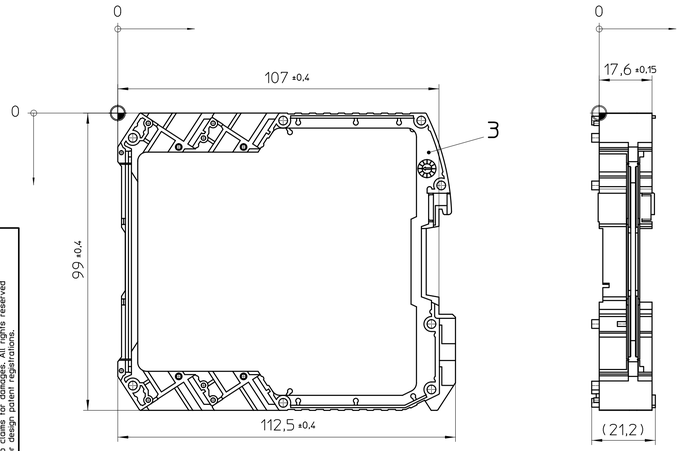

FRONT PLATE

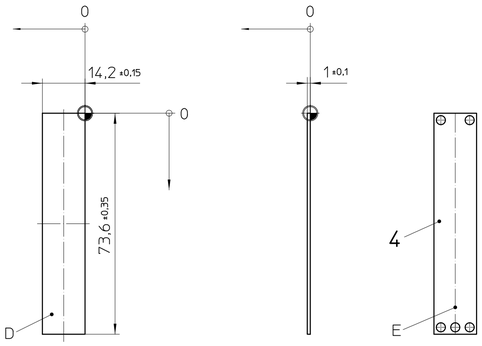

A-A

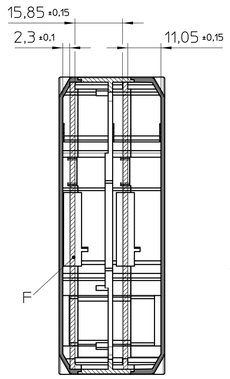

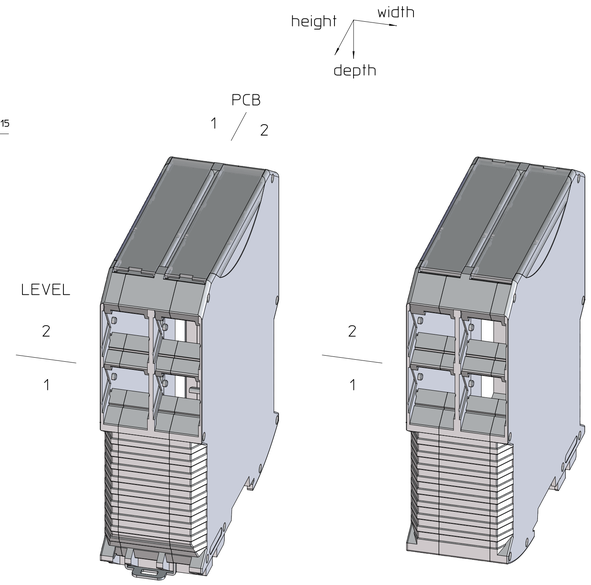

HINGED COVER

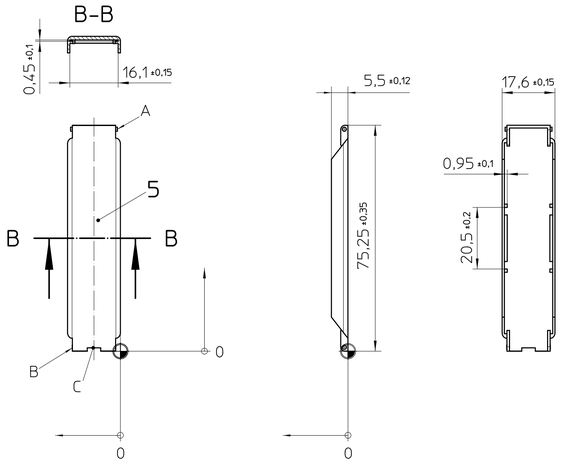

FOOT CATCH
2:1

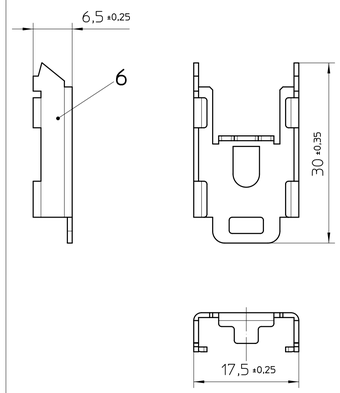

SPRING
5:1

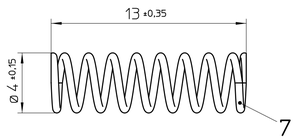

General Information:
- Simplified representation, exemplary shown in gray.
- Document excluded from change process
- Units are in millimeters [mm] and degrees [°]
- Tolerances apply in a normal climate according to DIN EN ISO 291-23/50-2, PA plastic parts with about 2% (% by weight) moisture content.
- ⊕ Workpiece zero point for mechanical processing
- Tolerances for mechanical processing are ISO 2768-mK
- Tolerances for printing DIN ISO 2768-m
- Machining radii min. R1, further on request
- Web: www.phoenixcontact.com

Additional Information:
A. Pivot bearing HINGED COVER
B. Locking HINGED COVER
C. Notch for locking release, by screw driver
D. Exposed side
E. Inner side
F. Recommended PCB outline on www.phoenixcontact.com webcode: #0512
G. Mounting rail like EN 60715, TH 35-7,5 or mounting rail similar to EN 60715, TH 35-15x1,5

KIT (not mounted)

Pos.	QTY	Description	Material
1	1	HOUSING LEFT	PA
2	1	HOUSING RIGHT	PA
3	1	HOUSING MIDDLE	PA
4	2	FRONT PLATE	PA
5	2	HINGED COVER	PC
6	1	FOOT CATCH	STL
7	1	SPRING	STL

DIN A1	document-No. / RI 00874218 /04	date 05.11.2025	scale 1:1
PHOENIX CONTACT	ident-No. 2713683	document-type TECDOC 2D_Productdrawing	
page 1 of 1	description ME MAX 35 G 2-2 KMGY		

Transfer or duplication of this document as well as the utilisation or communication of its content are not permitted unless express consen is granted. Violators are liable for damages. All rights reserved in case of patent, utility model or design patent registrations.

Weitergabe sowie Vervielfältigung dieses Dokuments, Verwertung und Mitteilung seines Inhalts sind verboten, soweit nicht ausdrücklich gestattet. Zuwiderhandlungen verpflichten zu Schadenersatz. Alle Rechte für den Fall der Patent-, Gebrauchsmuster- oder Designeintragung vorbehalten.